NR7Y CW Firmware - Paddle Rework

Important Note: because of the pins this rework reuses, when the firmware is in CW mode and an input mode that uses the port (PTT+port or any tip/ring mode), the serial port will NOT work correctly. This only affects CHIRP programming while the main firmware is running, it doesn't affect flashing from the bootloader. To use a memory programmer, change out of CW or out of a port input mode.

Other Important Note: external mics (specifically the external mic PTT switch) will no longer work, ever. The internal mic will continue to operate correctly, when the paddle is unplugged. With the paddle plugged in, the mic is switched out of the circuit, even in non-CW modulation modes. You could still plug in and speak into an external mic, but you'd have to use the main PTT button to key up.

Un-reworking the original Straight Key mod

If this radio has the previous straight key mod, remove the wire. The resistor that was removed for that mod also needs to be removed for this rework, so you're already 1/4 done!

Testing after Rework

The firmware will not allow setting of the input mode to the +port or tip/ring setting before the rework is completed. If possible, while the radio is still open on the benchtop after rework, it's strongly suggested to install a battery and set a tip/ring setting, then test a paddle in the port.

Rework Steps

1. To open the chassis before starting the rework:
    a. Remove the battery, volume knob (pull straight up), and antenna
    b. At the back of the radio south of the label, insert a flat blade screwdriver between the metal case and the plastic chassis, then pry down (levering the metal piece up).
    c. Once the lower end of the metal casing is clear of the plastic chassis, pull it out and down to slide the top end with the volume knob out of the upper section of the chassis. Don't pull too far as the speaker is attached to the plastic front with short wires.
    d. Pivot the metal casing with the circuit board to the left like opening a book. Note the little flat piece of plastic that goes around the mic/speaker ports, it usually falls off as you open the case.
    e. With the circuit board facing up on the workbench, observe the display is attached to the board using a black plastic retaining frame. On the lower left corner (closest the Menu button), insert a small flat bladed screwdriver and pry

in/back to lift the clip out of its rectangular hole. With that corner out, the display will be loose to lift up slightly, and carefully be flipped up over the top of the circuit board.

2. Remove these two resistors: the “straight key mod” resistor on the left, and the resistor on the right between the two plastic port alignment pins. Note their position near the right edge of the board and below the mic/speaker ports.

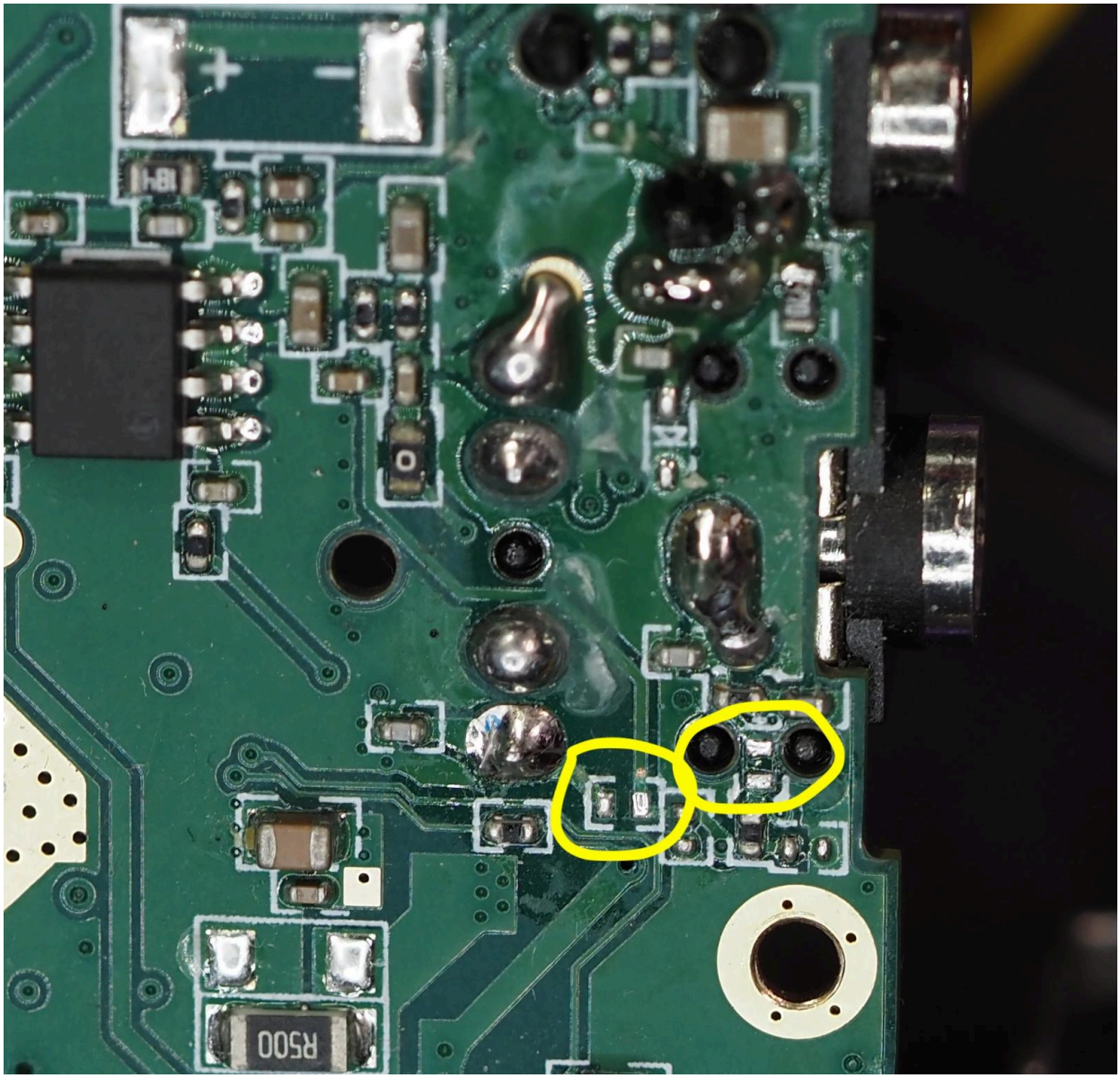

3. Add a wire between the PTT pin on the left side, to the 3.5mm Tip terminal on the right. Size of the wire and flushness to the board does not matter, as this wire sits under the display.

On the left end of the wire, keep it out of the way of the screen retaining bracket that goes through the rectangular hole - in this picture the hole is partially covered by the blue wire, and it will need to be pulled up and left before reinstalling the screen.

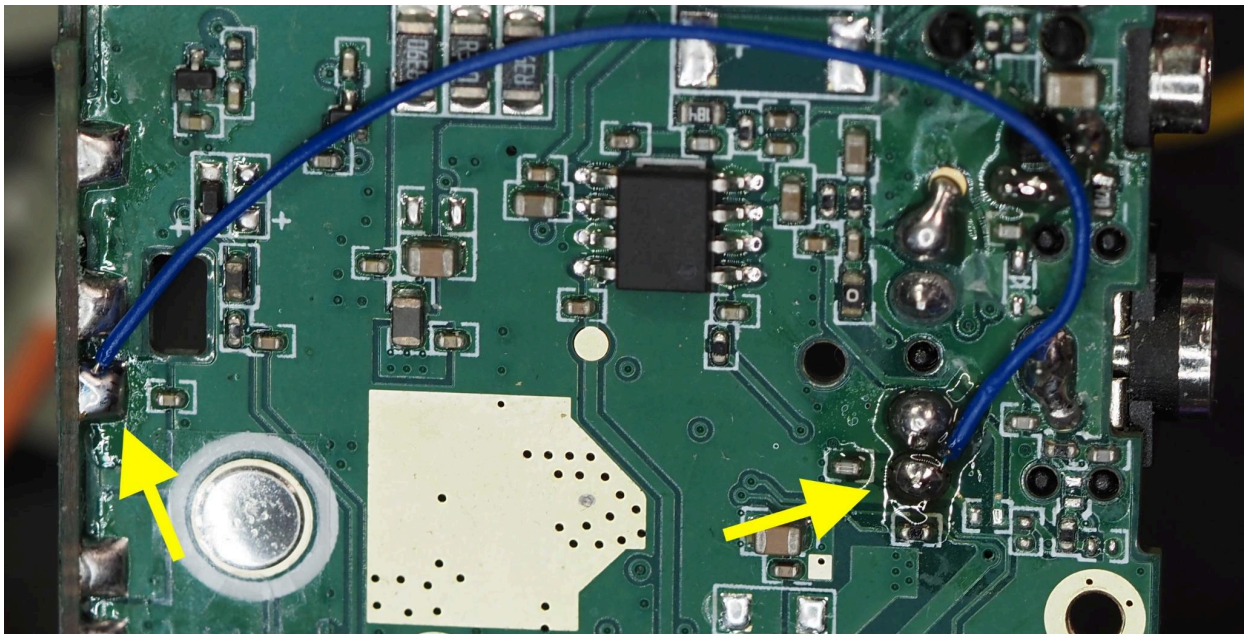

4. Add a wire between the 3.5mm Sleeve terminal, and the tiny transistor leg. Sorry about the tiny connecting point. Using solder flux and a magnifier will help.

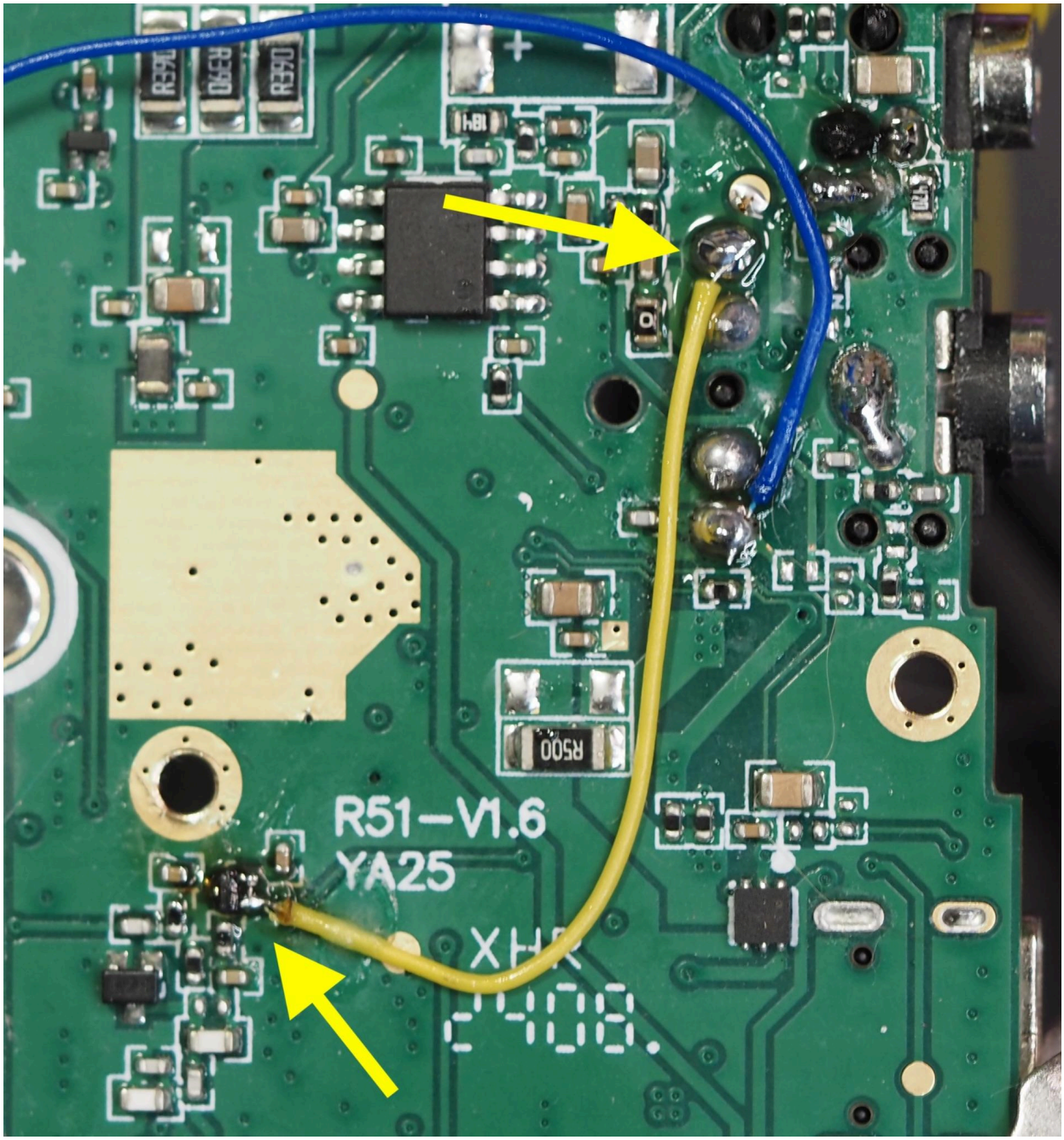

Closeup of the transistor leg where the wire needs to be connected:

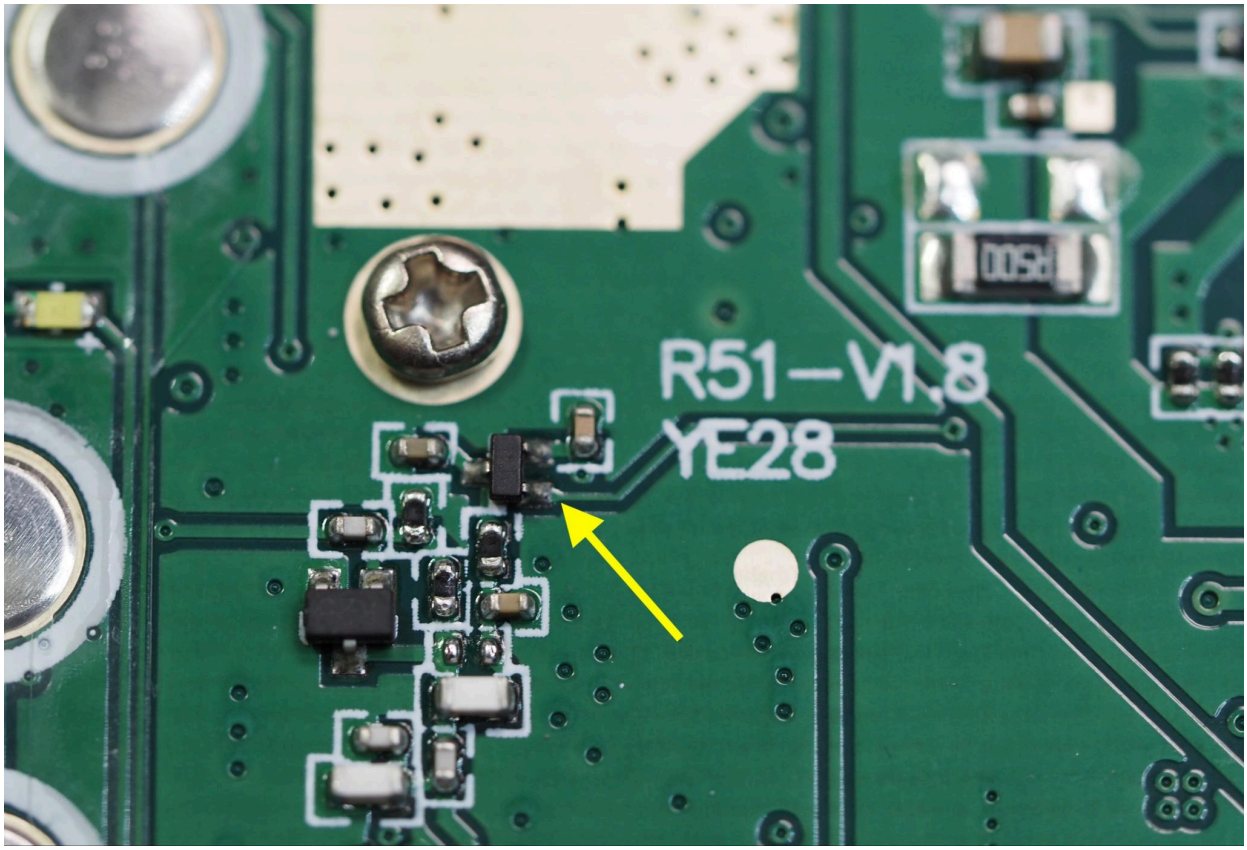

5. With the rework complete, test the paddle input, then reassemble the radio. Take note of the display condition and inside of the clear plastic display cover, as they may need polishing to eliminate fingerprints or debris. Don’t forget to reinstall the flat plastic piece around the ports before sliding the inner casing back into the plastic chassis. Press down hard on the label to snap the casing back into place.

Rework at the schematic level:

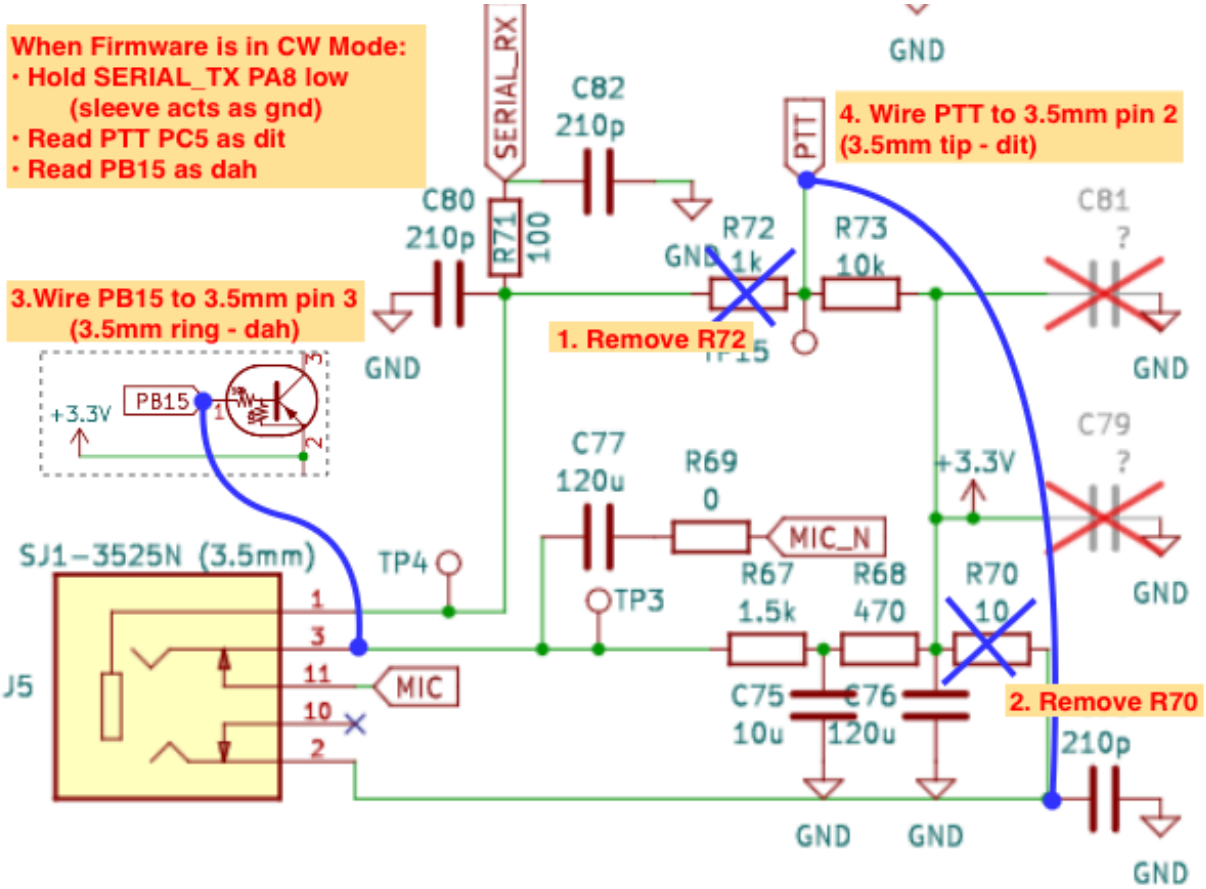

Original schematic by MentalDetector:
https://github.com/mentalDetector/Quansheng_UV-K5_PCB_R51-V1.4_PCB_Reversing_Rev._0.9?tab=readme-ov-file